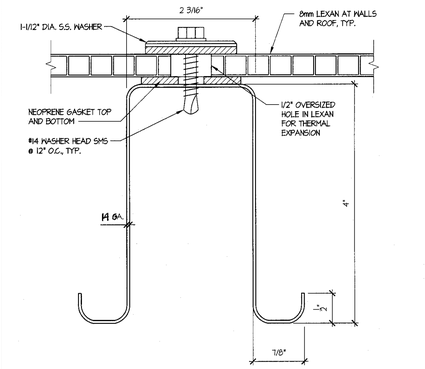

TOP CHORD — SCALE: FULL SIZE — 1

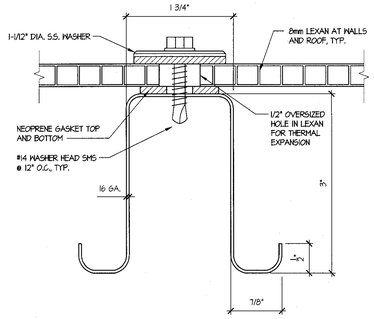

PURLIN / GIRT — SCALE: FULL SIZE — 2

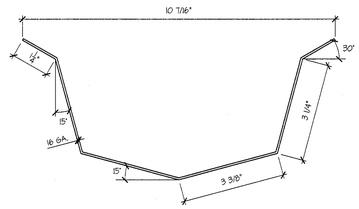

GUTTER — SCALE: HALF SIZE — 3

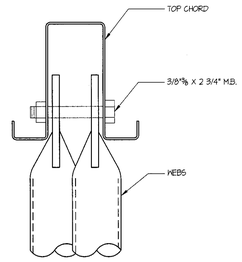

WEBS TO TOP CHORD — SCALE: HALF SIZE — 4

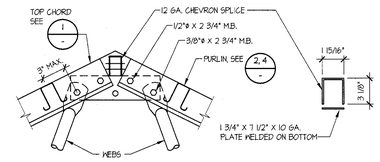

SPLICE CHEVRON — SCALE: 1-1/2" = 1'-0" — 5

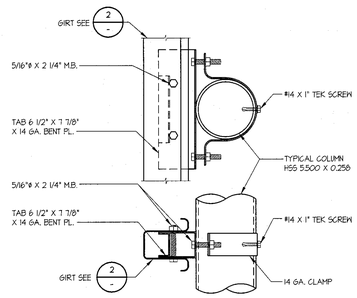

SIDEWALL GIRT CONNECTION — SCALE: 3" = 1'-0" — 6

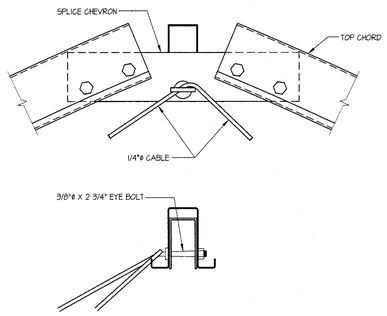

NOTE: WEB(S) NOT SHOWN FOR CLAIRITY

CABLE CONNECTION AT SPLICE CHEVRON — SCALE: 3" = 1'-0" — 7

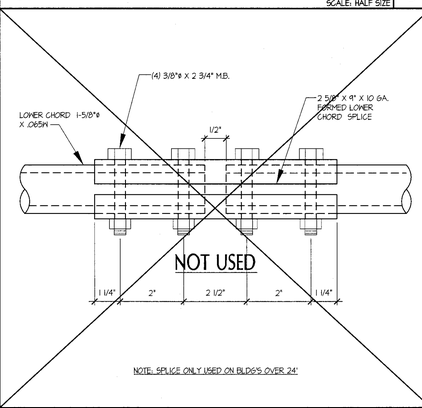

NOTE: SPLICE ONLY USED ON BLDG'S OVER 24'

LOWER CHORD SPLICE — SCALE: HALF SIZE — 8

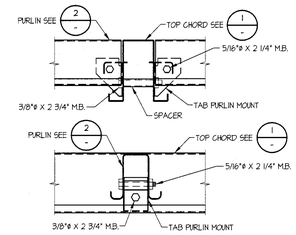

PURLIN TO TOP CHORD CONNECTION — SCALE: 3" = 1'-0" — 9

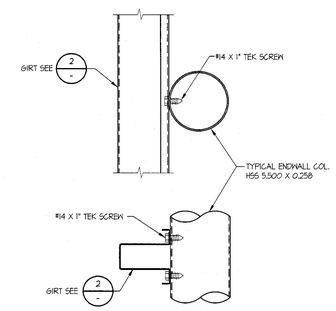

ENDWALL GIRT CONNECTION — SCALE: 3" = 1'-0" — 10

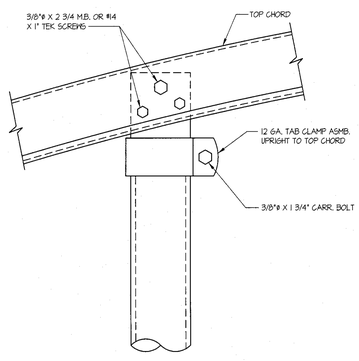

UPRIGHT @ TOP CHORD CONNECTION — SCALE: 3" = 1'-0" — 11

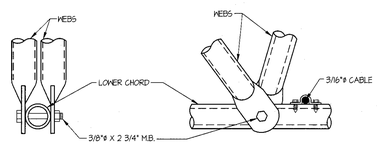

WEBS TO LOWER CHORD CONNECTION — SCALE: 3" = 1'-0" — 12

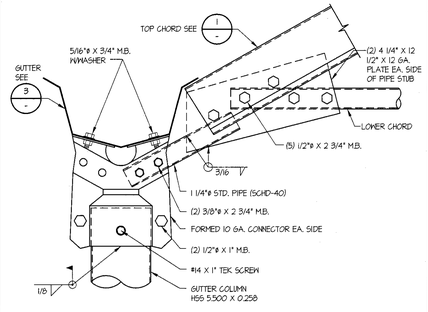

TOP CHORD / COLUMN CONNECTION — SCALE: 3" = 1'-0" — 13

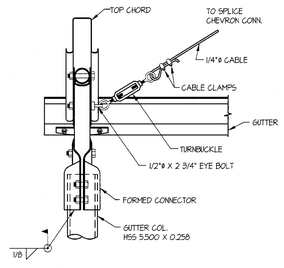

CABLE CONNECTION @ TERMINATION ENDS — SCALE: 1-1/2" = 1'-0" — 14

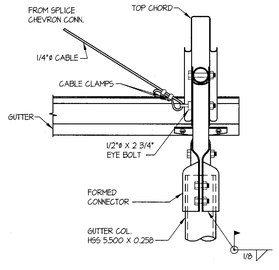

CABLE CONNECTION @ TERMINATION ENDS — SCALE: 1-1/2" = 1'-0" — 15

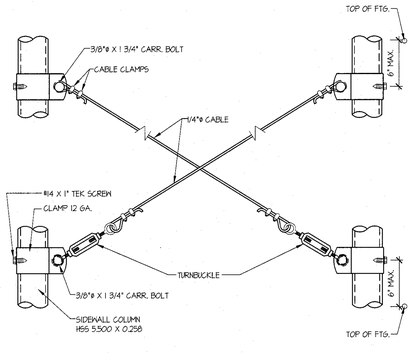

COLUMN "X" BRACING — SCALE: 1-1/2" = 1'-0" — 16

tBP
architecture
planning
interiors
management

tBP/Architecture
5455 Wilshire Boulevard, Suite 1200
Los Angeles, CA 90036-4242
ph: 323. 556. 3788 fx: 323. 556. 3799

LICENSED ARCHITECT
STATE OF CALIFORNIA

architect

consultant

IDENTIFICATION STAMP
DIV. OF THE STATE ARCHITECT
OFFICE OF REGULATION SERVICES
File No. 19-C11
Appl No. 03-112201
AC ___ FLS DJ SS SKP
DATE 10 . 13 - 09

DSA Los Angeles Basin Regional Office
700 North Alameda Street, Suite 5-500
Los Angeles, California 90012
ph: 213/897-3995 fx: 213/897-3159/0726

agency

ANTELOPE VALLEY COLLEGE
HEALTH & SCIENCE BUILDING
ANTELOPE VALLEY COMMUNITY COLLEGE DISTRICT
3041 WEST AVENUE K
LANCASTER, CA 93536-5426

owner

tBP project number : 20641.00
file name: A-0742-EP-6H.dwg
drawn by: MH checked by: -
date: JULY 30, 2009 - 100% CD

Rev:	date:	description:

THIS DRAWING AND THE DESIGNS, DEPICTIONS, IDEAS AND OTHER INFORMATION CONTAINED HEREIN CONSTITUTE UNPUBLISHED WORK OF tBP/ARCHITECTURE AND SHALL REMAIN THE PROPERTY OF tBP/ARCHITECTURE IN PERPETUITY. NO PART THEREOF SHALL BE REPRODUCED, DISCLOSED, DISTRIBUTED, SOLD, PUBLISHED OR OTHERWISE USED IN ANY WAY WITHOUT THE ADVANCED EXPRESS WRITTEN CONSENT OF tBP/ARCHITECTURE.

drawing title:
GREENHOUSE DETAILS

drawing no.:
A-7.42
drawing of