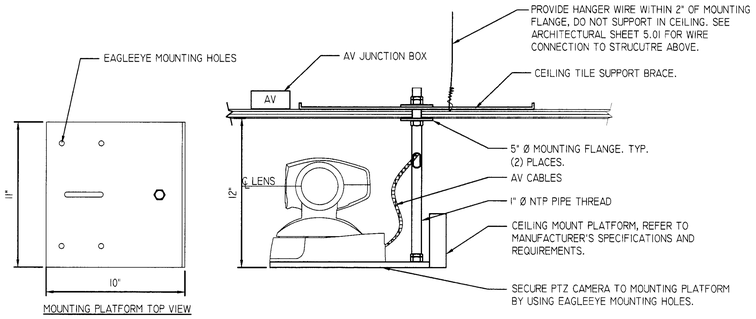

NOTES:

1. COORDINATE LOCATION OF AV JUNCTION BOX WITH MOUNTING HARDWARE LOCATION.
2. CAMERA AND BRACKET : APPROX. TOTAL WEIGHT 18 LB.

1 CEILING MOUNTED PTZ CAMERA MOUNTING DETAIL
SCALENTS

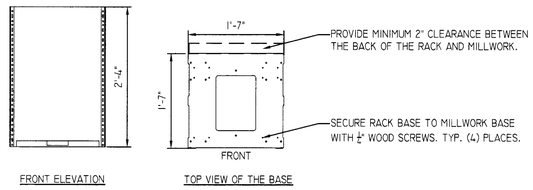

2 EQUIPMENT RACK TYPE B MOUNTING DETAIL
SCALENTS

tBP
architecture
planning
interiors
management

tBP/Architecture
5455 Wilshire Boulevard, Suite 1200
Los Angeles, CA 90036-4242
ph: 323. 556. 3788 fx: 323. 556. 3799

LICENSED ARCHITECT
STATE OF CALIFORNIA

architect

VANTAGE
Vantage Technology Consulting Group
201 Continental Blvd.Suite 120
El Segundo,California 90245
310 536 7878 • fax 310 536 7877 • www.VantageTCG.com

REGISTERED PROFESSIONAL ENGINEER
E-15[illegible]
Exp. 06/30/2011
ELECTRICAL
STATE OF CALIFORNIA

consultant

IDENTIFICATION STAMP
DIV. OF THE STATE ARCHITECT
OFFICE OF REGULATION SERVICES
File No. 19-C11
Appl No. 03-112201
AC. ___ FLS. ___ SS SEPS
DATE 10-13-09

DSA Los Angeles Basin Regional Office
700 North Alameda Street, Suite 5-500
Los Angeles, California 90012
ph: 213/897-3995 fx: 213/897-3159/0726

agency

ANTELOPE VALLEY COLLEGE
HEALTH & SCIENCE BUILDING
ANTELOPE VALLEY COMMUNITY COLLEGE DISTRICT
3041 WEST AVENUE K
LANCASTER, CA 93536-5426

owner

tBP project number : 2064.00
file name: 4241 AV401.DWG
drawn by: CL checked by: ATERMA
date: JULY 30, 2009 - 100% CD

Rev:	date:	description:

THIS DRAWING AND THE DESIGNS, DEPICTIONS, IDEAS AND OTHER INFORMATION CONTAINED HEREIN CONSTITUTE UNPUBLISHED WORK OF tBP/ARCHITECTURE AND SHALL REMAIN THE PROPERTY OF tBP/ARCHITECTURE IN PERPETUITY. NO PART THEREOF SHALL BE REPRODUCED, DISCLOSED, DISTRIBUTED, SOLD, PUBLISHED OR OTHERWISE USED IN ANY WAY WITHOUT THE ADVANCED EXPRESS WRITTEN CONSENT OF tBP/ARCHITECTURE.

drawing title:
AUDIOVISUAL DETAILS
(2 OF 2)

drawing no.:
AV-6.02
drawing - of -