MANUFACTURER:
FSR INC.
244, BERGEN BLVD.
WEST PATERSON, NJ 07424
PH:973.785.4347 FAX:973.785.4207
WWW.FSRINC.COM

MODEL: FL-500P

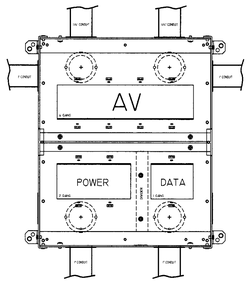

NOTES:

1. COORDINATE CARPET/TILE FLANGE HEIGHT AND FINISH WITH ARCHITECT
2. ALL CONDUITS FOR AV ARE RUN PER AV INFRASTRUCTURE PLAN
3. CONDUITS FOR POWER AND DATA ARE RUN PER ELECTRICAL AND I.T. PLAN RESPECTIVELY
4. AV CONDUITS SHOWN ARE REPRESENTATIVE. SEE AV DRAWINGS FOR EXACT REQUIREMENTS
5. FLOORBOX COVER MUST BE FLUSHED WITH FINISHED FLOOR
6. SEAL EDGES OF PAN TO CREATE DEPRESSED SLAB AT FLOOR BOX LOCATION.

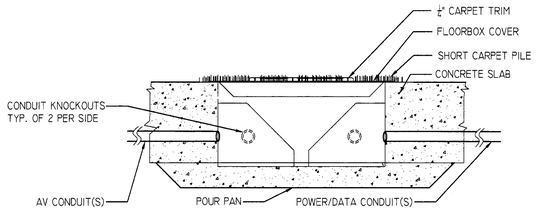

1 CONSOLIDATED AV, POWER AND DATA FLOORBOX
SCALENTS

NOTES:

1. CEILING LOUDSPEAKER ASSEMBLY(ENCLOSURE, LOUDSPEAKER, AND GRILLE) TO BE PROVIDED AND INSTALLED BY CONTRACTOR.
2. CABLING AND TERMINATION AT LOUDSPEAKER TO BE PROVIDED BY AVC.
3. GRILLE FINISH REQUIREMENTS AS SPECIFIED BY ARCHITECT
4. APPROX. WEIGHT OF SPEAKER : LESS THAN 15 LBS.

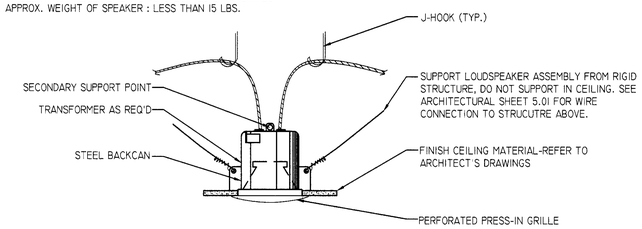

2 TYPICAL CEILING RECESSED SPEAKER
SCALENTS

NOTES

1. A CLEAR SPACE OF 2" IS REQUIRED BY THE MANUFACTURER AROUNDTHE PERIMETER OF THE DISPLAY UNIT FOR VENTILATION.
2. APPROXIMATE WEIGHT OF 50" DISPLAY IS 100 LB.

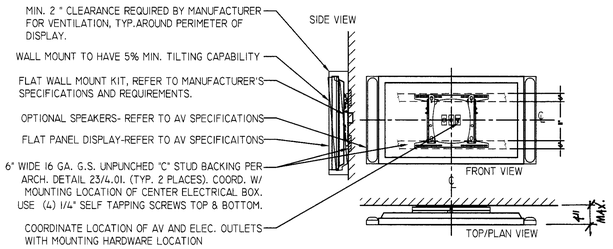

3 TYPICAL FLAT PANEL DISPLAY
SCALENTS

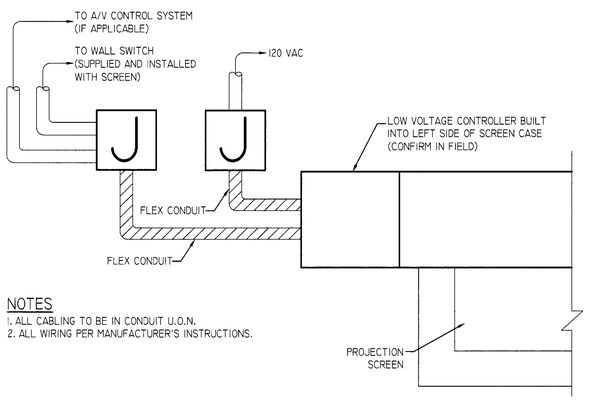

NOTES

1. ALL CABLING TO BE IN CONDUIT U.O.N.
2. ALL WIRING PER MANUFACTURER'S INSTRUCTIONS.

4 MOTORIZED SCREEN CONNECTION DETAIL
SCALENTS

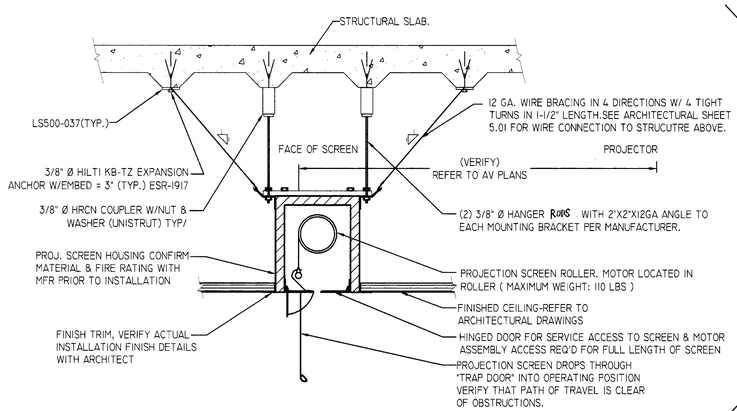

SECTION

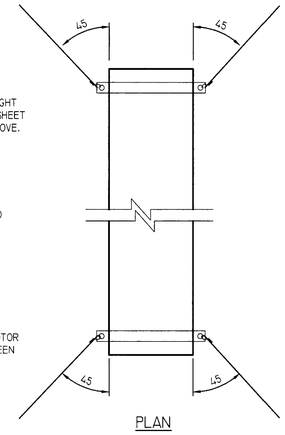

PLAN

NOTES

1. LOW VOLTAGE CONTROL INTERFACE TO BE PROVIDED WHERE MULTIPLE CONTROL LOCATIONS OCCUR AND/OR WHERE SCREEN IS TO BE CONTROLLED VIA THE AV CONTROL SYSTEM.

5 CEILING RECESSED PROEJCTION SCREEN
SCALENTS

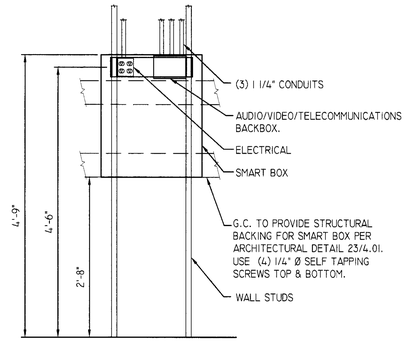

7 SMART BOX WALL ELEVATION
SCALENTS

NOTE:

1. DESIGNS & ARRANGEMENT ILLUSTRATED ARE FOR REFERENCE ONLY. SEE 7/S-610 FOR SUPPORT DETAIL.
2. PROJECTOR STRUCTURAL SUPPORT TO BE RIGID AND FREE FROM ANY PERCEPTIBLE VIBRATION IN STRUCTURE TO PREVENT MOVEMENT OF PROJECTED IMAGE.
3. REFER TO AV EQUIPMENT PLAN(S) FOR POSITION OF STRUCTURAL SUPPORT ABOVE CEILING, FOR EACH PROJECTOR LOCATION.

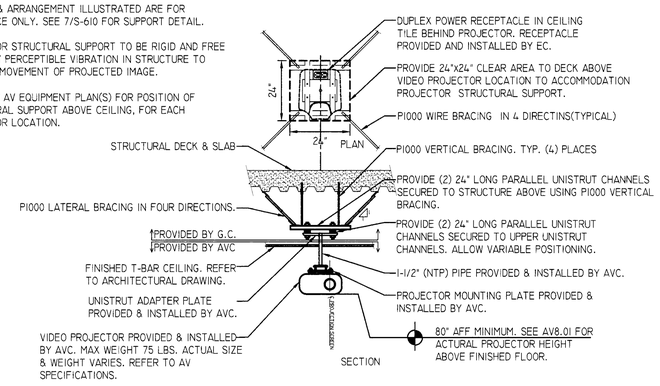

6 TYPICAL CEILING MOUNTED PROJECTOR
SCALENTS

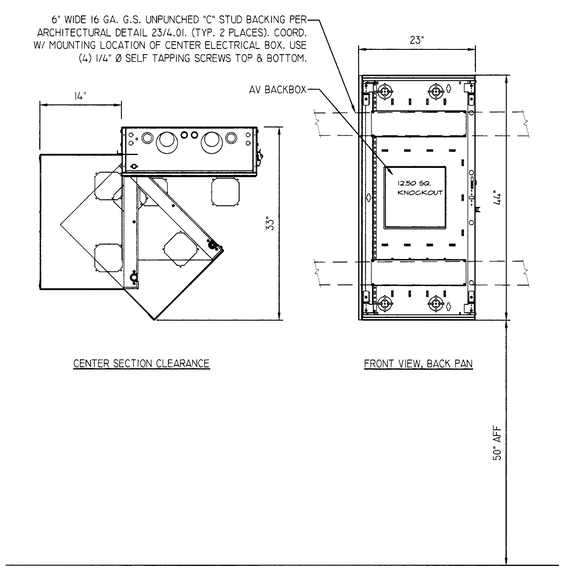

CENTER SECTION CLEARANCE

FRONT VIEW, BACK PAN

8 WALL MOUNTED EQUIPMENT RACK(TYPE A) MOUNTING DETAILS
SCALENTS

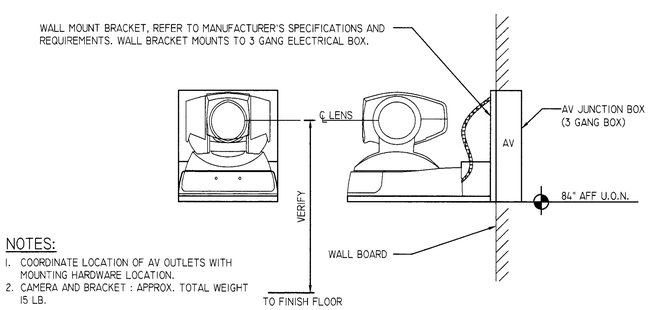

NOTES:

1. COORDINATE LOCATION OF AV OUTLETS WITH MOUNTING HARDWARE LOCATION.
2. CAMERA AND BRACKET : APPROX. TOTAL WEIGHT 15 LB.

9 TYPICAL WALL MOUNTED CAMERA
SCALENTS

tBP
architecture
planning
interiors
management

tBP/Architecture
5455 Wilshire Boulevard, Suite 1200
Los Angeles, CA 90036-4242
ph: 323. 556. 3788 fx: 323. 556. 3799

architect

VANTAGE
Vantage Technology Consulting Group
301 Continental Blvd.Suite 120
El Segundo,California 90245
310 536 7676 ● fax 310 536 7677 ● www.VantageTCG.com

consultant

IDENTIFICATION STAMP
DIV. OF THE STATE ARCHITECT
OFFICE OF REGULATION SERVICES
File No: 19-C11
Appl No. 03-112201
AC VB RLS / SS SLP
DATE 10-13-09

DSA Los Angeles Basin Regional Office
700 North Alameda Street, Suite 5-500
Los Angeles, California 90012
ph: 213/897-3995 fx: 213/897-3159/0726

agency

ANTELOPE VALLEY COLLEGE HEALTH & SCIENCE BUILDING

ANTELOPE VALLEY COMMUNITY COLLEGE DISTRICT
3041 WEST AVENUE K
LANCASTER, CA 93536-5426

owner

tBP project number : 20641.00
file name: 424-1 AV401.DWG
drawn by: GL checked by: ATERMA
date: JULY 30, 2009 - 100% CD

Rev:	date:	description:

THIS DRAWING AND THE DESIGNS, DEPICTIONS, IDEAS AND OTHER INFORMATION CONTAINED HEREIN CONSTITUTE UNPUBLISHED WORK OF tBP/ARCHITECTURE AND SHALL REMAIN THE PROPERTY OF tBP/ARCHITECTURE IN PERPETUITY. NO PART THEREOF SHALL BE REPRODUCED, DISCLOSED, DISTRIBUTED, SOLD, PUBLISHED OR OTHERWISE USED IN ANY WAY WITHOUT THE ADVANCED EXPRESS WRITTEN CONSENT OF tBP/ARCHITECTURE.

drawing title:
AUDIOVISUAL DETAILS
(1 OF 2)

drawing no.:
AV-6.01
drawing - of -