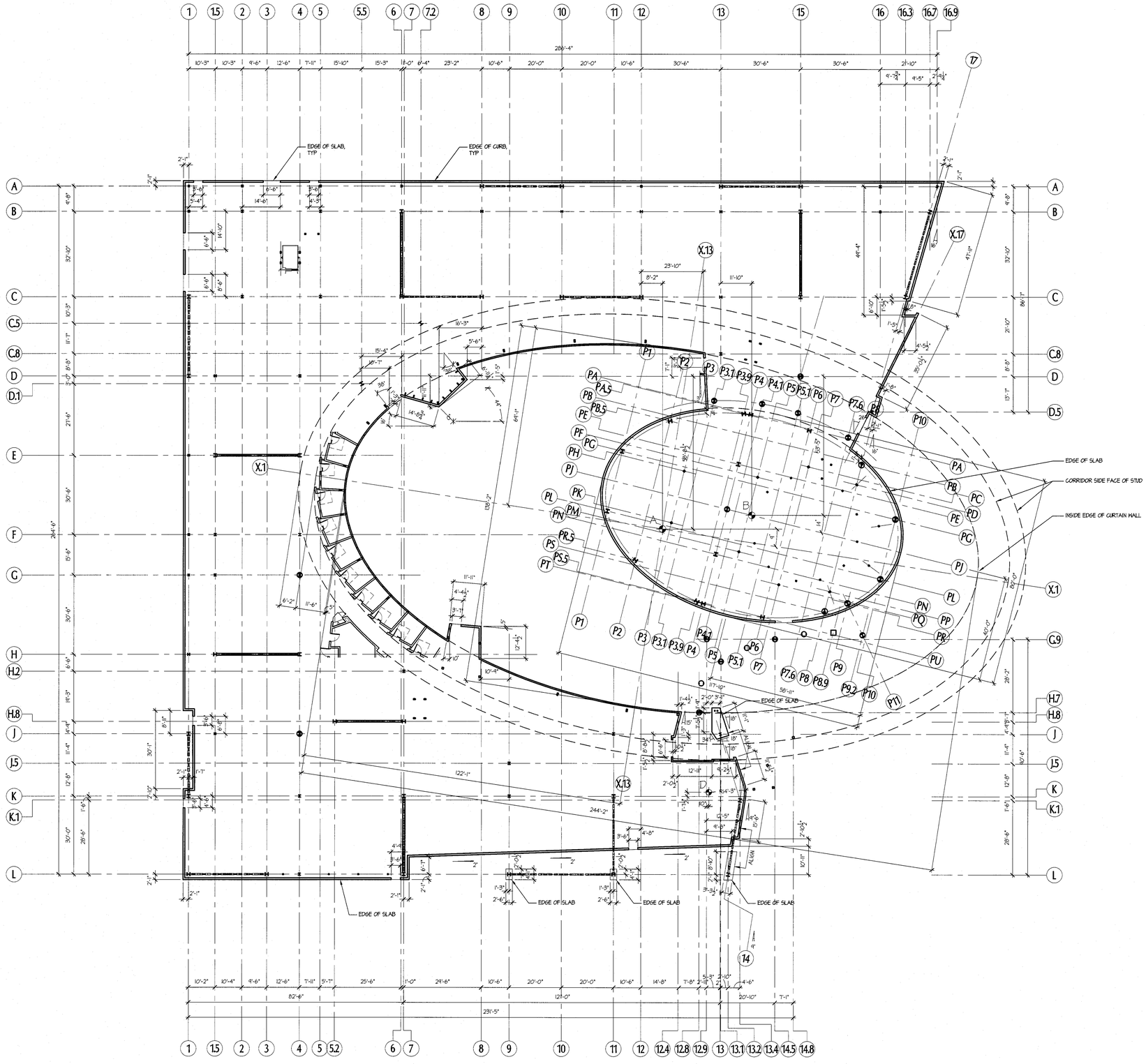

OVERALL FIRST FLOOR CONTROL PLAN

SCALE: 1/8" = 1'-0"

0 4' 8' 16' 32'

NORTH

ENLARGED PLAN @ GRID 16.3, C - C.8

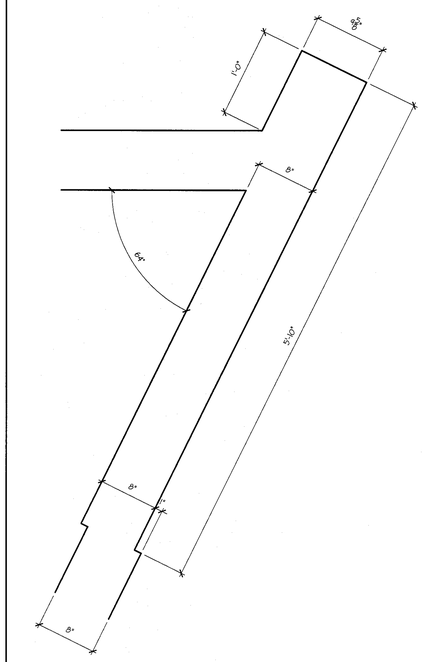

ENLARGED PLAN @ GRID 13.4, J.5

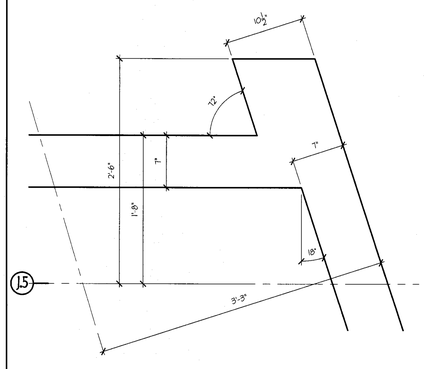

KEY PLAN

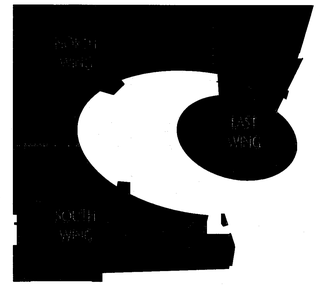

NORTH

tBP
architecture
planning
interior
management

tBP/Architecture
5455 Wilshire Boulevard, Suite 1200
Los Angeles, CA 90036-4242
ph: 323. 556. 3708 fx: 323. 556. 3799

LICENSED ARCHITECT
STEVEN C. TAN
No. C14214
REGISTERED
STATE OF CALIFORNIA

architect

consultant

IDENTIFICATION STAMP
DIV. OF THE STATE ARCHITECT
OFFICE OF REGULATION SERVICES
File No. 19-C11
Appl No. 03-112201
AC. DATE 10-13-09

DSA Los Angeles Basin Regional Office
700 North Alameda Street, Suite 5-500
Los Angeles, California 90012
ph: 213/897-3995 fx: 213/897-3159/0726

agency

ANTELOPE VALLEY COLLEGE HEALTH & SCIENCE BUILDING

ANTELOPE VALLEY COMMUNITY COLLEGE DISTRICT
3041 WEST AVENUE K
LANCASTER, CA 93536-5426

owner

tBP project number : 20641.00
file name: AO-0103-CONTROL-IFP.dwg
drawn by: BDV checked by: JF
date: JULY 30, 2009 - 100% CD

Rev:	date:	description:

THIS DRAWING AND THE DESIGNS, DEPICTIONS, IDEAS AND OTHER INFORMATION CONTAINED HEREIN CONSTITUTE UNPUBLISHED WORK OF tBP/ARCHITECTURE AND SHALL REMAIN THE PROPERTY OF tBP/ARCHITECTURE IN PERPETUITY. NO PART THEREOF SHALL BE REPRODUCED, DISCLOSED, DISTRIBUTED, SOLD, PUBLISHED OR OTHERWISE USED IN ANY WAY WITHOUT THE ADVANCED EXPRESS WRITTEN CONSENT OF tBP/ARCHITECTURE.

drawing title:
OVERALL FIRST FLOOR CONTROL PLAN

drawing no.:
AO-1.03
drawing of

P:\20641.00 AVC Health & Sci Bldg\Drawings\AS Construction Dwgs\AO-0103-CONTROL Pl-1.1F.dwg, 8/4/2009 7:02:59 PM, 1:1