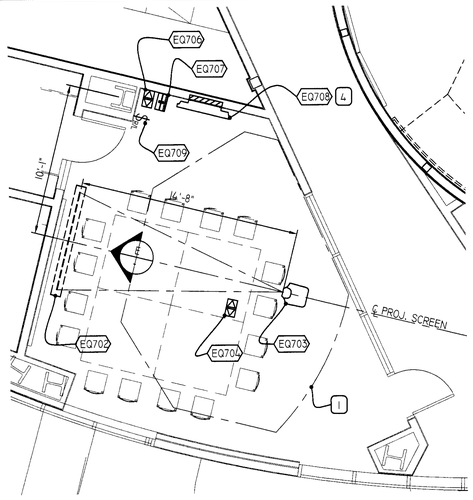

A AV EQUIPMENT PLAN-15 PERSON MEETING ROOM-HS 194
SCALE:1/4" = 1' 0"

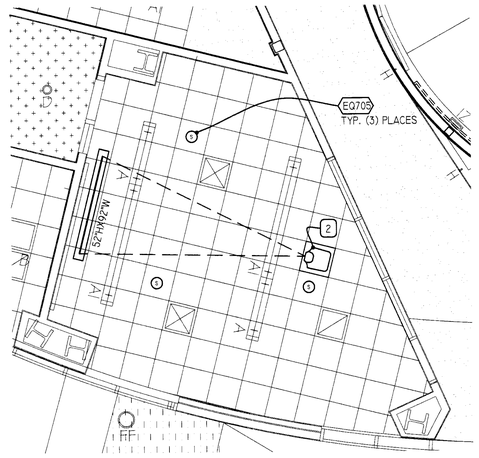

B AV REFLECTED CEILING PLAN-15 PERSON MEETING ROOM-HS 194
SCALE:1/4" = 1' 0"

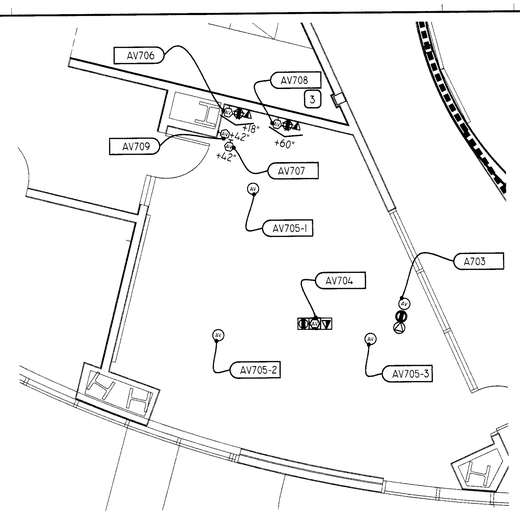

C AV INFRASTRUCTURE PLAN-15 PERSON MEETING ROOM-HS 194
SCALE:1/4" = 1' 0"

REFERENCE NOTES:

1. LINE INDICATES PERIMETER OF AREA FOR BEST VIEWING OF VIDEO/COMPUTER IMAGE DISPLAY. GOOD VIEWING BEYOND LINE PROGRESSIVELY DIMINISHES AS DISTANCE FROM DISPLAY IMAGE IS INCREASED.
2. LINE INDICATES PERIMETER OF AREA AT AND ABOVE CEILING TO BE CLEAR OF SERVICES FOR PROJECTOR STRUCTURAL SUPPORT.
3. INFRASTRUCTURE FOR FUTURE FLAT PANEL DISPLAY.
4. PROVIDE CONTINUOUS BLOCKING IN WALL AS REQUIRED FOR STABLE MOUNTING OF AV DEVICE TO BE INSTALLED BY THE AUDIOVISUAL CONTRACTOR. COORD WITH MANUFACTURER'S REQUIREMENTS FOR DEVICE INSTALLATION.

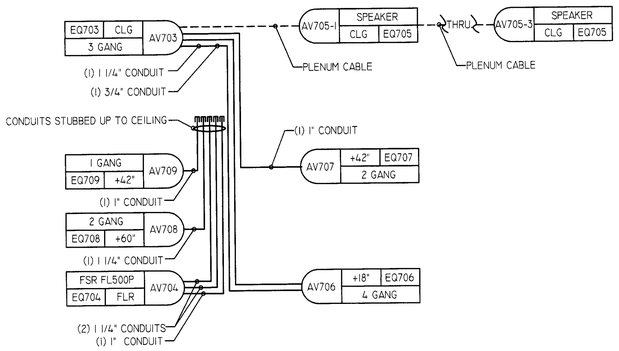

D AV CONNECTIVITY DIAGRAM
SCALE: NONE

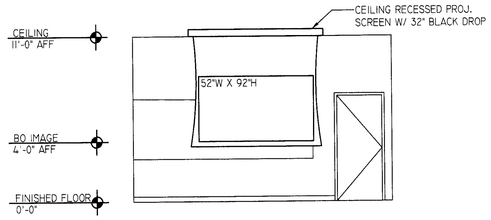

E AV EQUIPMENT ELEVATION
SCALE:1/4" = 1' 0"

EQUIPMENT LEGEND EQ #	DESCRIPTION	DETAIL REF.	LOCATION	PROVIDED BY	INSTALLED BY
EQ702	PROJECTION SCREEN	5/AV-6.01	CEILING RECESSED	SPEC SECTION 11132	SPEC SECTION 11132
EQ703	VIDEO PROJECTOR	6/AV-6.01	CEILING MOUNTED	AVC	AVC
EQ704	AV INPUT PANEL	1/AV-6.01	CONF. TABLE	AVC	AVC
EQ705	LOUDSPEAKER	2/AV-6.01	CEILING RECESSED	SPEC SECTION 11130	SPEC SECTION 11130
EQ706	AV INPUT PANEL	7/AV-6.01	WALL MOUNTED	AVC	AVC
EQ707	AV CONTROL PANEL		WALL MOUNTED	AVC	AVC
EQ708	FLAT PANEL DISPLAY (FUTURE)	3/AV-6.01	WALL MOUNTED	AVC	AVC
EQ709	SCREEN RAISE/LOW SWITCH	4/AV-6.01	WALL RECESSED	SPEC SECTION 11132	SPEC SECTION 11132

0 1' 2' 4' 8'

NORTH

tBP
architecture
planning
interiors
management
tBP/Architecture
5455 Wilshire Boulevard, Suite 1200
Los Angeles, CA 90036-4242
ph. 323. 556. 3788 fx. 323. 556. 3799
LICENSED ARCHITECT
STATE OF CALIFORNIA
architect

VANTAGE
Vantage Technology Consulting Group
201 Continental Blvd/Suite 120
El Segundo/California 90245
310 536 7676 ■ fax 310 536 7677 ■ www.VantageTCG.com
PROFESSIONAL ENGINEER
E-18351
Exp. 06/30/2011
ELECTRICAL
STATE OF CALIFORNIA
consultant

IDENTIFICATION STAMP
DIV. OF THE STATE ARCHITECT
OFFICE OF REGULATION SERVICES
File No. 79-C11
Appl No. 03-112201
AC PS FLS / SS
DATE 10-13-09

DSA Los Angeles Basin Regional Office
700 North Alameda Street, Suite 5-500
Los Angeles, California 90012
ph 213/897-3995 fx. 213/897-3159/0726
agency

ANTELOPE VALLEY COLLEGE
HEALTH & SCIENCE BUILDING
ANTELOPE VALLEY COMMUNITY COLLEGE DISTRICT
3041 WEST AVENUE K
LANCASTER, CA 93536-5426
owner

tBP project number : 20641.00
file name: 424-1 AV401.DWG
drawn by: GL checked by: ATERMA
date: JULY 30, 2009 - 100% CD

Rev.	date:	description:

THIS DRAWING AND THE DESIGNS, DEPICTIONS, IDEAS AND OTHER INFORMATION CONTAINED HEREIN CONSTITUTE UNPUBLISHED WORK OF tBP/ARCHITECTURE AND SHALL REMAIN THE PROPERTY OF tBP/ARCHITECTURE IN PERPETUITY. NO PART THEREOF SHALL BE REPRODUCED, DISCLOSED, DISTRIBUTED, SOLD, PUBLISHED OR OTHERWISE USED IN ANY WAY WITHOUT THE ADVANCED EXPRESS WRITTEN CONSENT OF tBP/ARCHITECTURE.

drawing title:
AUDIOVISUAL LAYOUT
MEETING ROOM#HS194

drawing no:
AV-4.07
drawing - of -