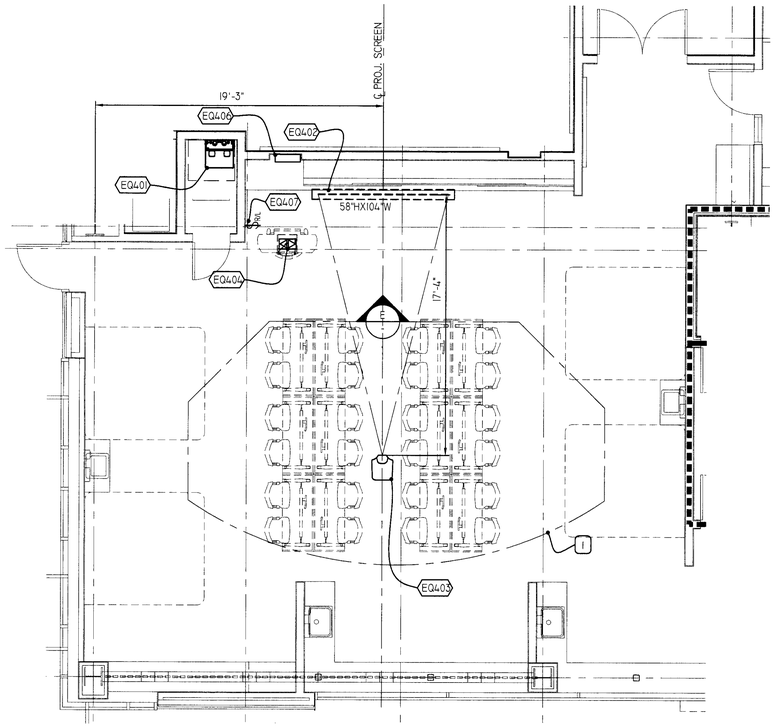

A AV EQUIPMENT PLAN
SCALE:1/4" = 1' 0"

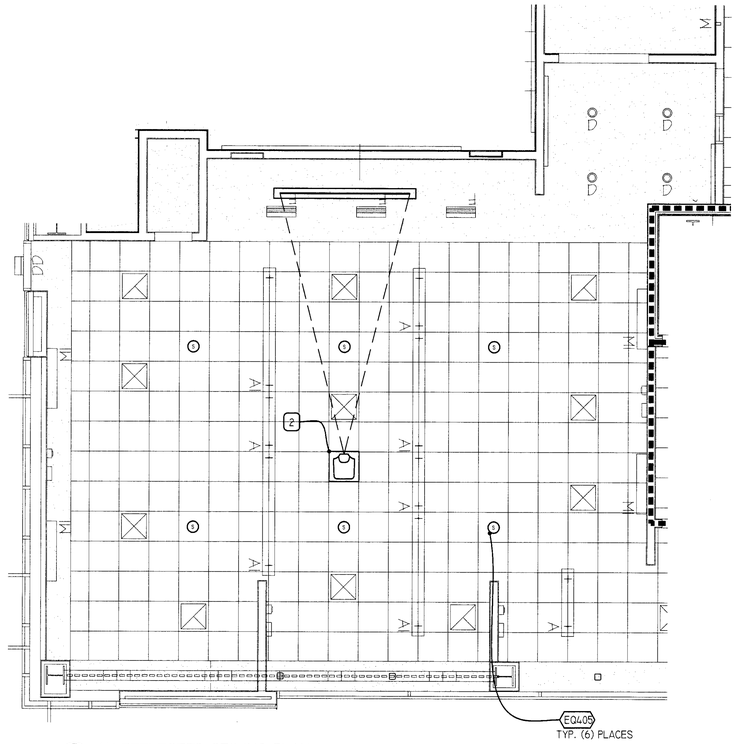

B AV REFLECTED CEILING PLAN
SCALE:1/4" = 1' 0"

REFERENCE NOTES:

1. LINE INDICATES PERIMETER OF AREA FOR BEST VIEWING OF VIDEO/COMPUTER IMAGE DISPLAY. GOOD VIEWING BEYOND LINE PROGRESSIVELY DIMINISHES AS DISTANCE FROM DISPLAY IMAGE IS INCREASED.
2. LINE INDICATES PERIMETER OF AREA AT AND ABOVE CEILING TO BE CLEAR OF SERVICES FOR PROJECTOR STRUCTURAL SUPPORT.

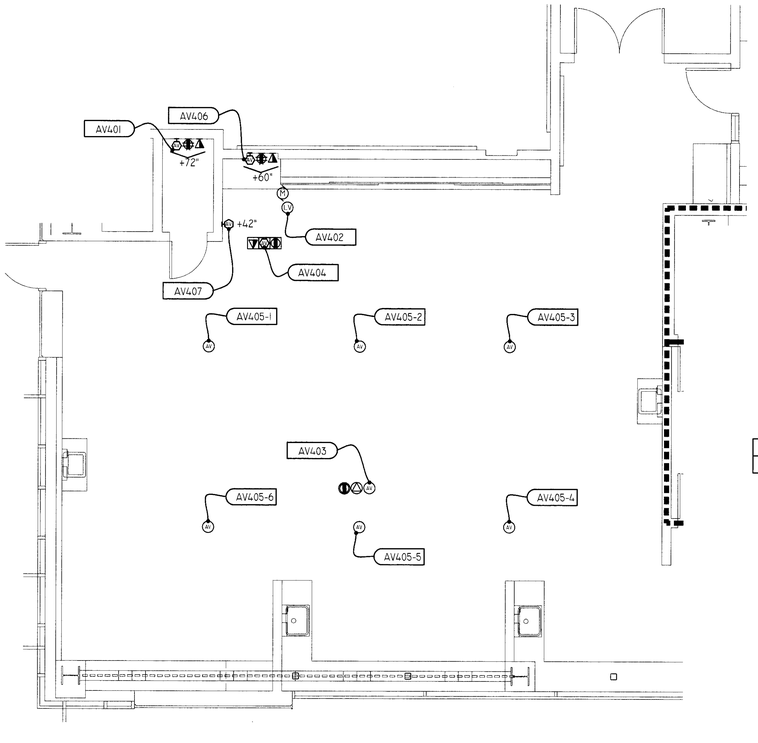

C AV INFRASTRUCTURE PLAN
SCALE:1/4" = 1' 0"

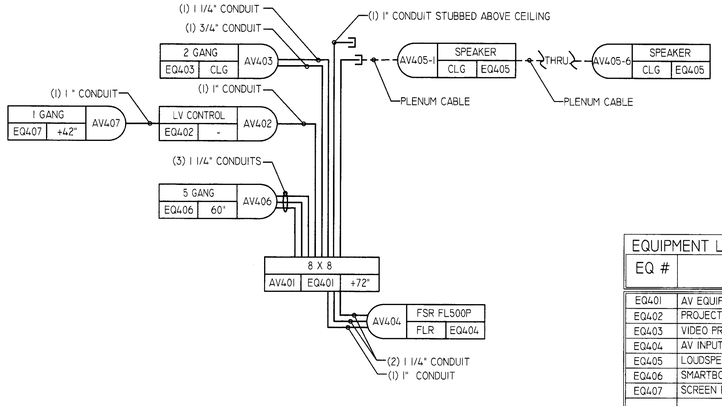

D AV CONNECTIVITY DIAGRAM
SCALE: NONE

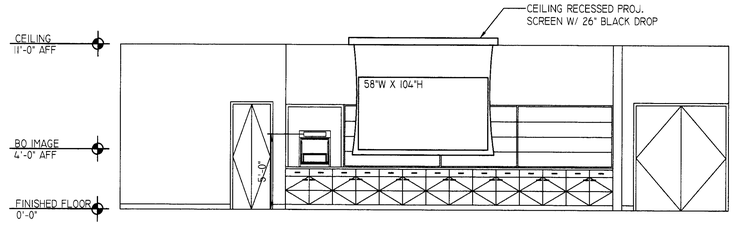

E AV EQUIPMENT ELEVATION
SCALE: NONE

EQUIPMENT LEGEND

EQ #	DESCRIPTION	DETAIL REF.	LOCATION	PROVIDED BY	INSTALLED BY
EQ401	AV EQUIPMENT RACK-TYPE A	8/AV-6.01	WALL MOUNTED	AVC	AVC
EQ402	PROJECTION SCREEN	5/AV-6.01	CEILING RECESSED	SPEC SECTION 11132	SPEC SECTION 11132
EQ403	VIDEO PROJECTOR	6/AV-6.01	CEILING MOUNTED	AVC	AVC
EQ404	AV INPUT PANEL	1/AV-6.01	INSTRUCTOR'S STATION	AVC	AVC
EQ405	LOUDSPEAKER	2/AV-6.01	CEILING RECESSED	SPEC SECTION 11130	SPEC SECTION 11130
EQ406	SMARTBOX	7/AV-6.01	WALL MOUNTED	AVC	AVC
EQ407	SCREEN RAISE/LOW SWITCH	4/AV-6.01	WALL RECESSED	SPEC SECTION 11132	SPEC SECTION 11132

0 1' 2' 4' 8'

NORTH

tBP
architecture
planning
interiors
management

tBP/Architecture
5455 Wilshire Boulevard, Suite 1200
Los Angeles, CA 90036-4242
ph: 323. 556. 3788 fx: 323. 556. 3799

LICENSED ARCHITECT
STATE OF CALIFORNIA

architect

VANTAGE
Vantage Technology Consulting Group
201 Continental Blvd.Suite 120
El Segundo,California 90245
310 536 7676 ◆ fax 310 536 7677 ◆ www.VantageTCG.com

PROFESSIONAL ENGINEER
E-15361
Exp. 06/30/2011
ELECTRICAL
STATE OF CALIFORNIA

consultant

IDENTIFICATION STAMP
DIV. OF THE STATE ARCHITECT
OFFICE OF REGULATION SERVICES
File No. 19-C11
Appl No. 03-112201
AC PB RLS SS SEA
DATE 10-13-09

DSA Los Angeles Basin Regional Office
700 North Alameda Street, Suite 5-500
Los Angeles, California 90012
ph: 213/897-3995 fx: 213/897-3159/0726
agency

ANTELOPE VALLEY COLLEGE HEALTH & SCIENCE BUILDING

ANTELOPE VALLEY COMMUNITY COLLEGE DISTRICT
3041 WEST AVENUE K
LANCASTER, CA 93536-5426

owner

tBP project number : 20641.00
file name: 424-1 AV401.DWG
drawn by: CL checked by: AT,ERMA
date: JULY 30, 2009 - 100% CD

Rev.	date:	description:

THIS DRAWING AND THE DESIGNS, DEPICTIONS, IDEAS AND OTHER INFORMATION CONTAINED HEREIN CONSTITUTE UNPUBLISHED WORK OF tBP/ARCHITECTURE AND SHALL REMAIN THE PROPERTY OF tBP/ARCHITECTURE IN PERPETUITY. NO PART THEREOF SHALL BE REPRODUCED, DISCLOSED, DISTRIBUTED, SOLD, PUBLISHED OR OTHERWISE USED IN ANY WAY WITHOUT THE ADVANCED EXPRESS WRITTEN CONSENT OF tBP/ARCHITECTURE.

drawing title:
AUDIOVISUAL LAYOUT
RT/MOA LAB-HS 111

drawing no:
AV-4.04
drawing - of -